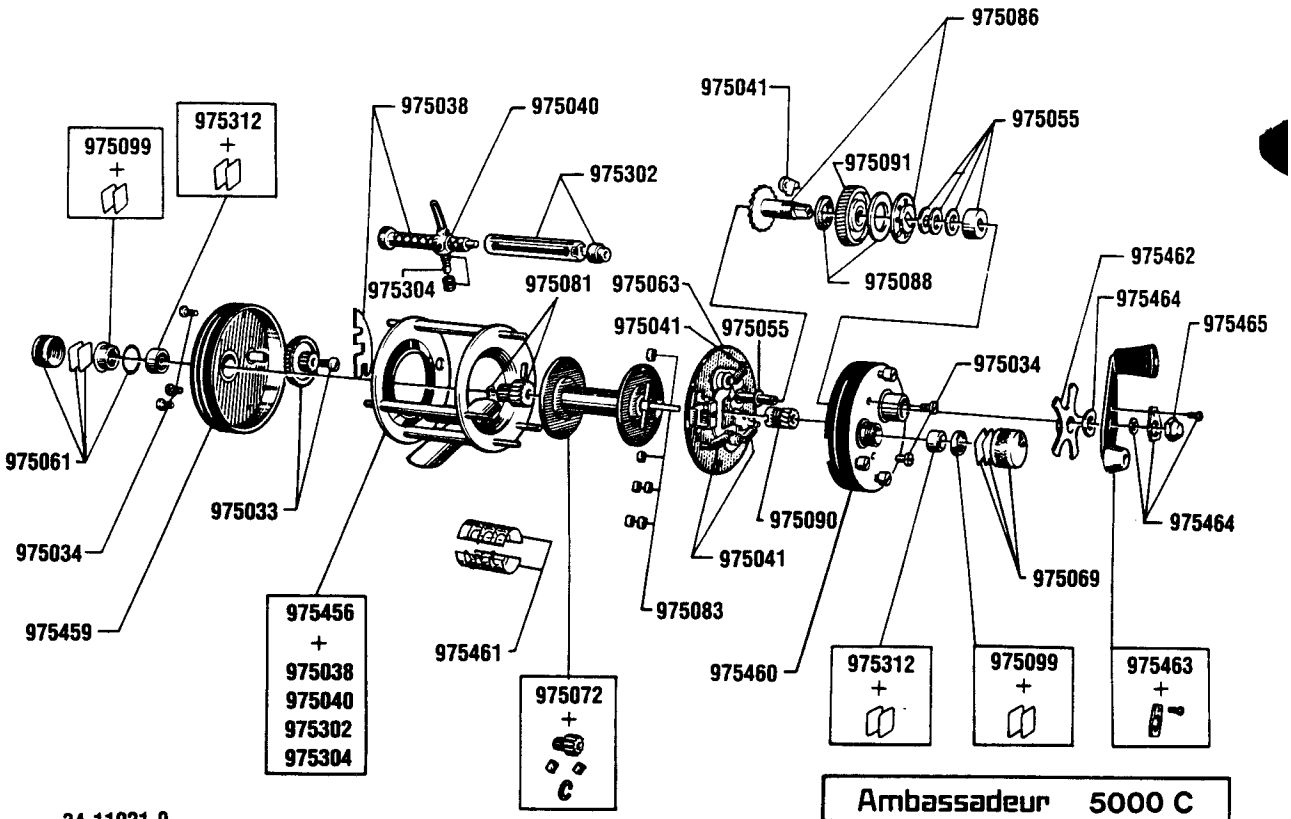
975086
975041
975055
975091
975088
975099 +
975312 +
975038
975040
975302
975304
975081
975063
975041
975055
975462
975464
975465
975034
975061
975033
975034
975459
975456 + 975038 975040 975302 975304
975461
975072 +
975083
975041
975090
975069
975464
975460
975312 +
975099 +
975463 +
34-11021-0
Ambassadeur 5000 C
83 - 0